3-phase with neutral

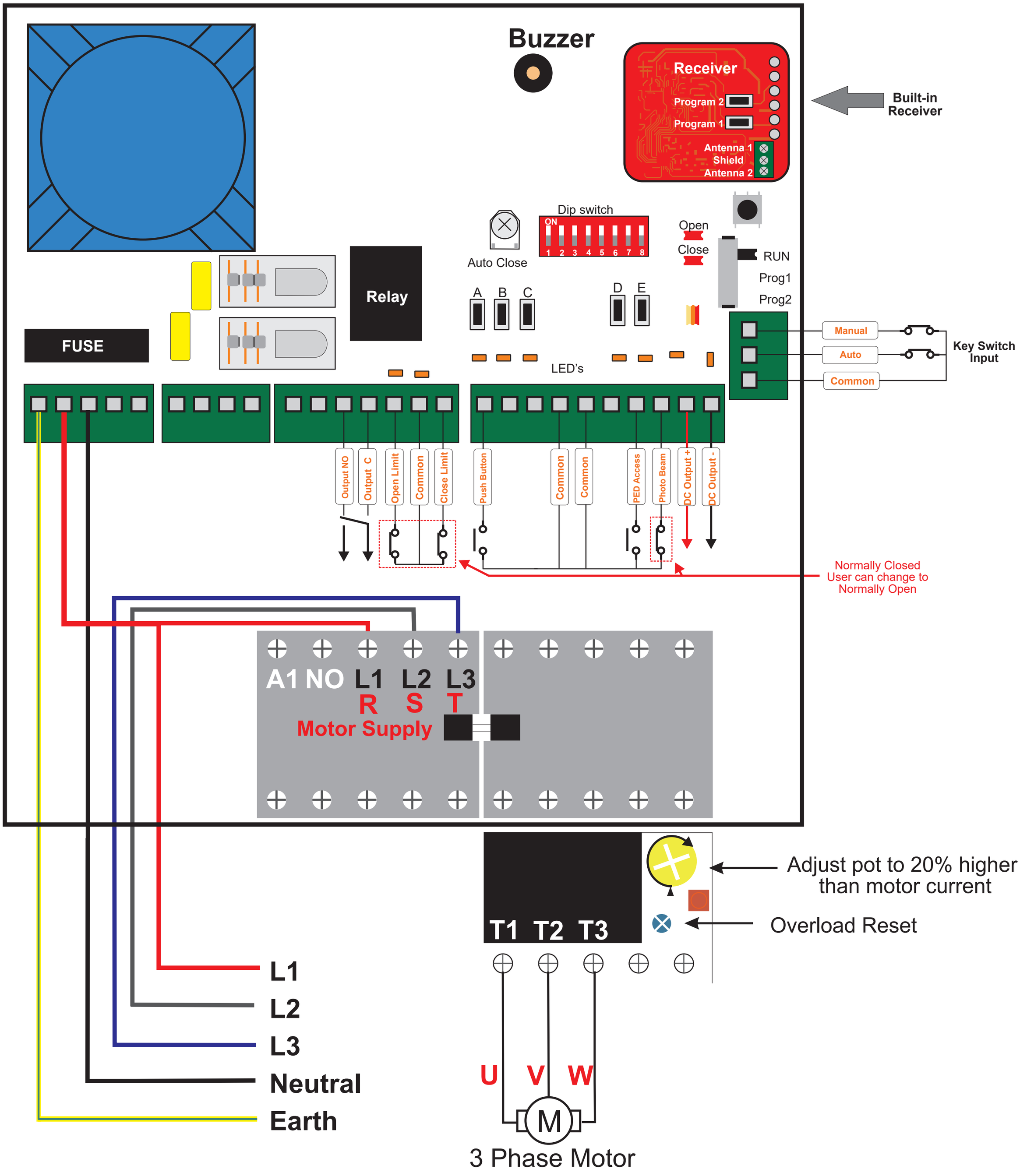
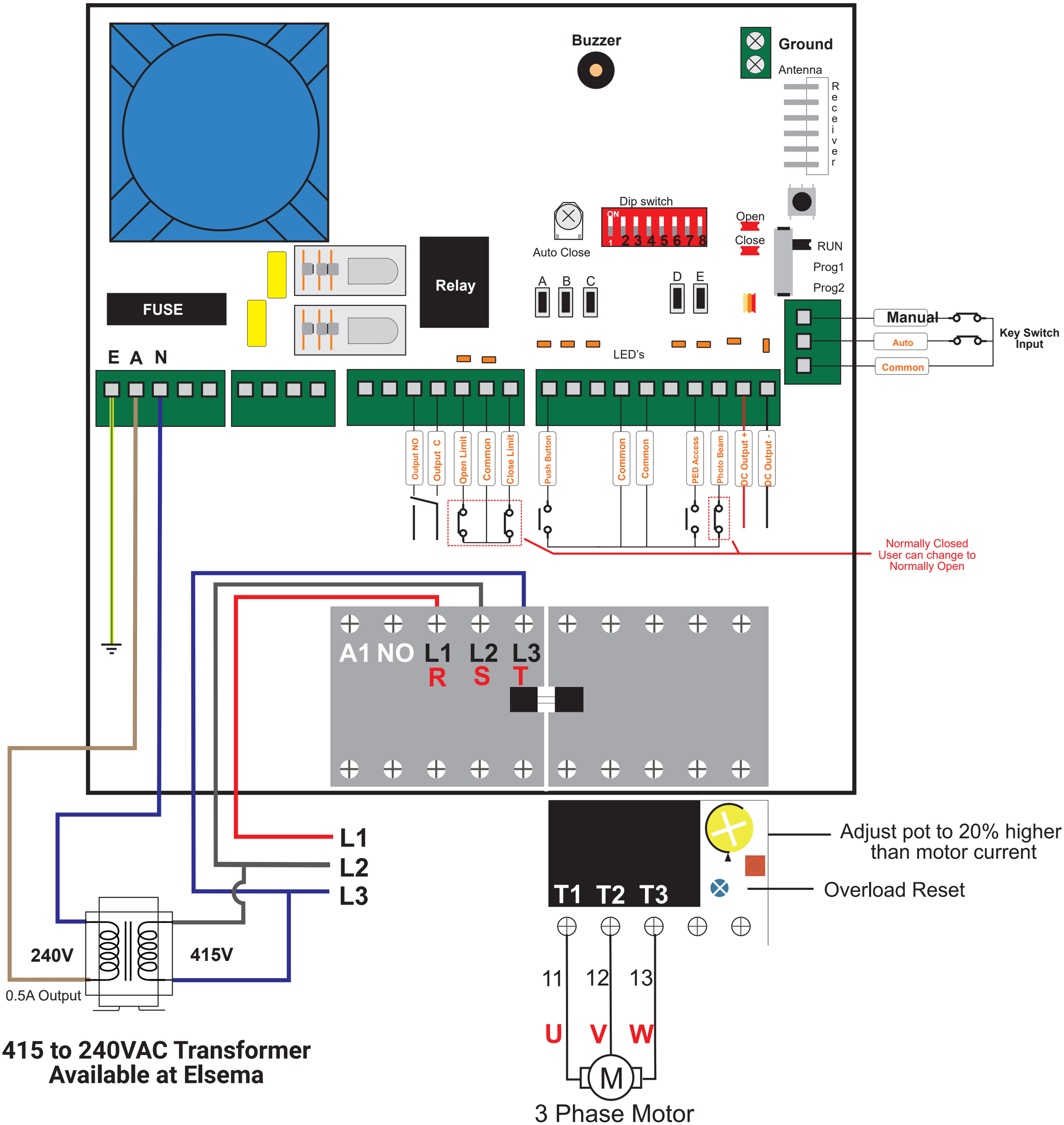
3-phase without neutral